INNOVATION. PRECISION. EXCELLENCE.

System Specifications

Mix Ratio
Variable 1:1 to 15:1

Viscosity Range
1 - 1,000,000 cps

Maximum 2K Volume Shot
34 ml at 1:1 ratio

Maximum Flow Rate
4 ml/s at 1:1 ratio

Max Inlet Pressure
900 psi (62 bar)

Weight
9 - 11.3 kg (20 - 25 lbs)
*without material

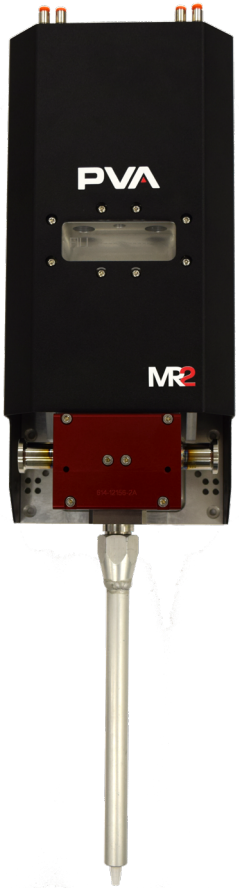

MR2
Metered Piston Dispenser

The MR2 is a versatile servo-controlled piston dispenser for processing single or dual component chemistries requiring a high level of dosing accuracy. Utilizing a volumetric displacement concept, the MR2 is capable of processing a wide range of chemistries, including viscous filled or abrasive materials, without concern for slight material changes from batch to batch or due to atmospheric conditions. This results in a more accurate dispensing process for difficult to process chemistries.

Utilizing a dual piston system, the MR2 can process 2K materials with mix ratios as wide as 15:1. For 1K chemistries, the MR2 provides the flexibility to alternate metering chambers to greatly reduce refill time resulting in greater throughput. Each metering chamber is independently controlled so you can easily alter the mix ratio and flow rate in a package mounted directly at the application point.

PVA's metering piston dispensing systems have many additional integrated features including:

- Closed loop, servo controlled variable ratio output
- Carbide fluid body for extended service life
- Ease of maintenance with only a single replacement seal for inlet and outlet valves
- Uses standard bell type static mixers for 2K processes

For more information, please contact PVA at info@pva.net or contact your local representative.

Headquarters
6 Corporate Drive | Halfmoon, NY 12065
tel +1 518 371 2684 | fx +1 518 371 2688
www.pva.net | info@pva.net

MR2 Mounting Dimensions

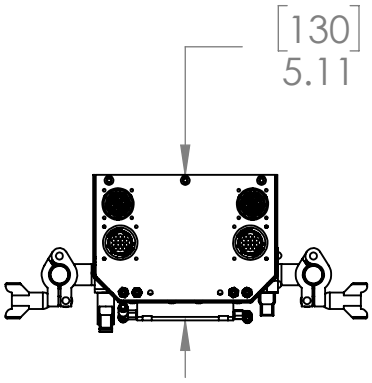

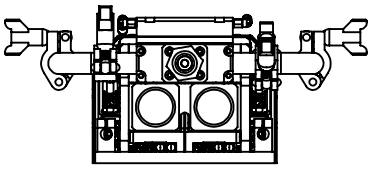

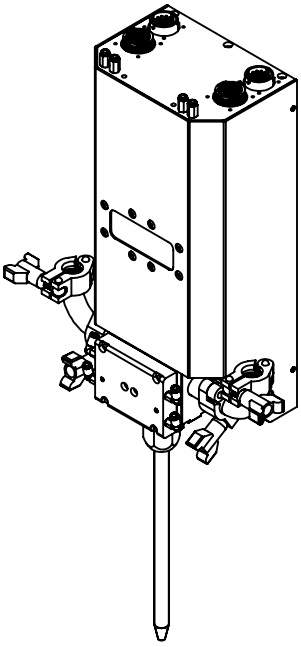

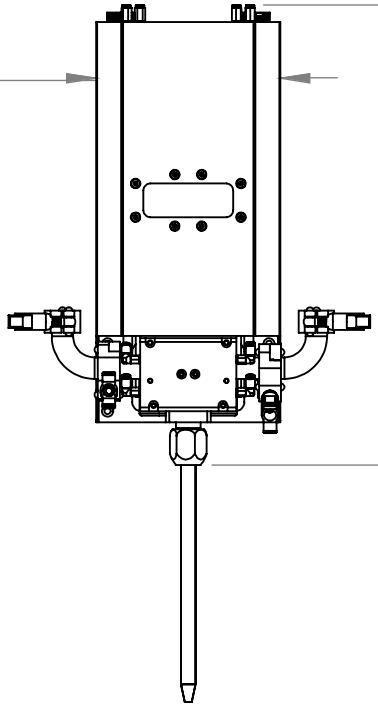

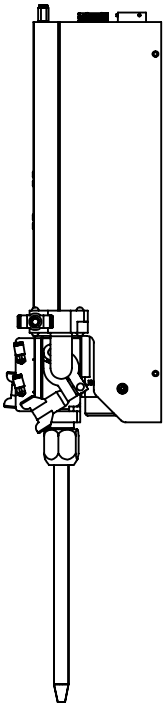

*all measurements provided in millimeters and inches